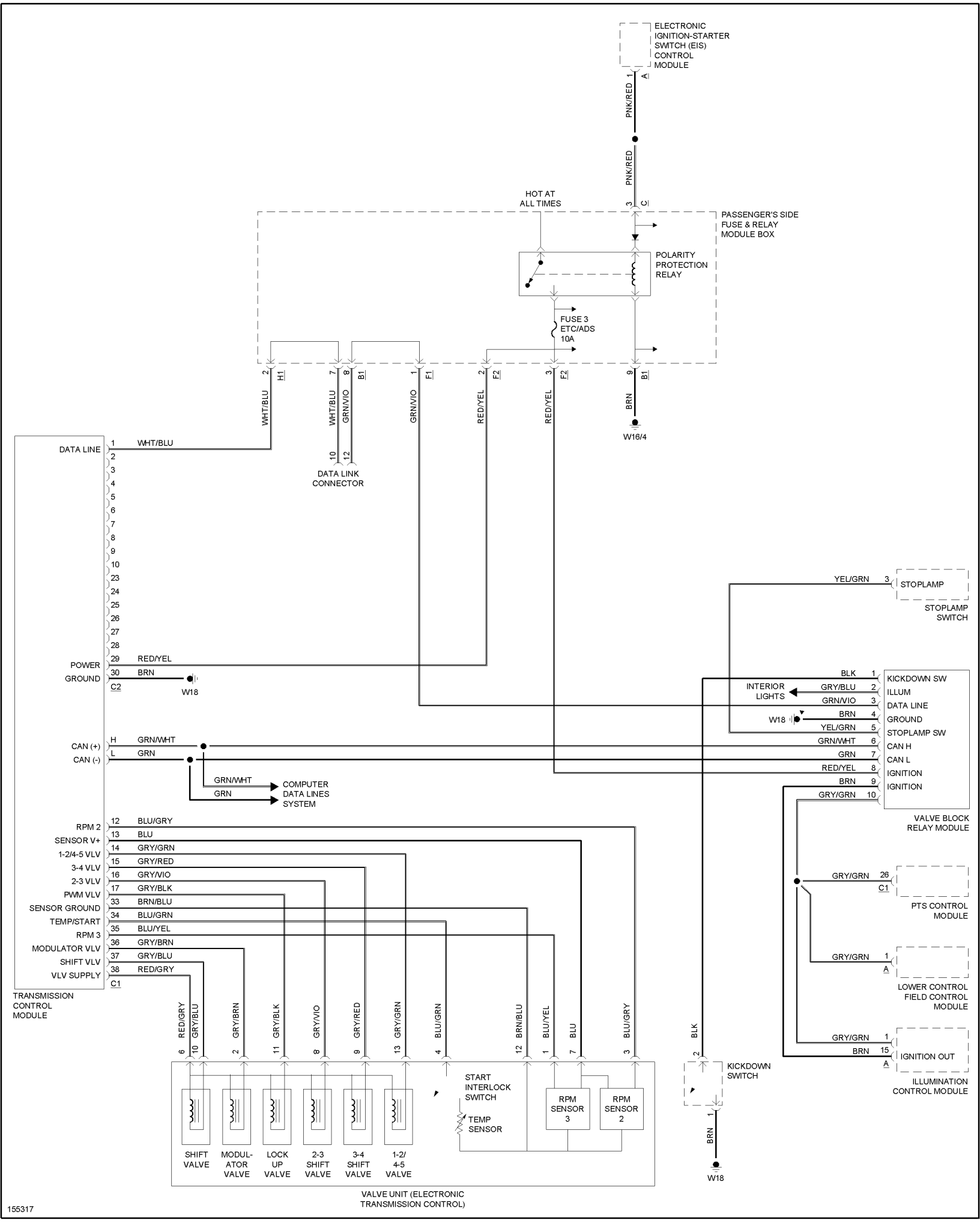
ELECTRONIC IGNITION-STARTER SWITCH (EIS) CONTROL MODULE
PNK/RED
HOT AT ALL TIMES
PASSENGER'S SIDE FUSE & RELAY MODULE BOX
POLARITY PROTECTION RELAY
FUSE 3 ETC/ADS 10A
WHT/BLU
GRN/VIO
RED/YEL
BRN
W16/4
DATA LINK CONNECTOR
DATA LINE
POWER
GROUND
W18
CAN (+)
CAN (-)
GRN/WHT
GRN
COMPUTER DATA LINES SYSTEM
RPM 2
SENSOR V+
1-2/4-5 VLV
3-4 VLV
2-3 VLV
PWM VLV
SENSOR GROUND
TEMP/START
RPM 3
MODULATOR VLV
SHIFT VLV
VLV SUPPLY
TRANSMISSION CONTROL MODULE
BLU/GRY
BLU
GRY/GRN
GRY/RED
GRY/VIO
GRY/BLK
BRN/BLU
BLU/GRN
BLU/YEL
GRY/BRN
RED/GRY
GRY/BLU
BLU/GRN
BRN/BLU
START INTERLOCK SWITCH
TEMP SENSOR
RPM SENSOR 3
RPM SENSOR 2
SHIFT VALVE
MODUL-ATOR VALVE
LOCK UP VALVE
2-3 SHIFT VALVE
3-4 SHIFT VALVE
1-2/ 4-5 VALVE
VALVE UNIT (ELECTRONIC TRANSMISSION CONTROL)
BLK
KICKDOWN SWITCH
YEL/GRN
STOPLAMP
STOPLAMP SWITCH
INTERIOR LIGHTS
KICKDOWN SW
ILLUM
DATA LINE
GROUND
STOPLAMP SW
CAN H
CAN L
IGNITION
IGNITION
VALVE BLOCK RELAY MODULE
PTS CONTROL MODULE
LOWER CONTROL FIELD CONTROL MODULE
IGNITION OUT
ILLUMINATION CONTROL MODULE

155317