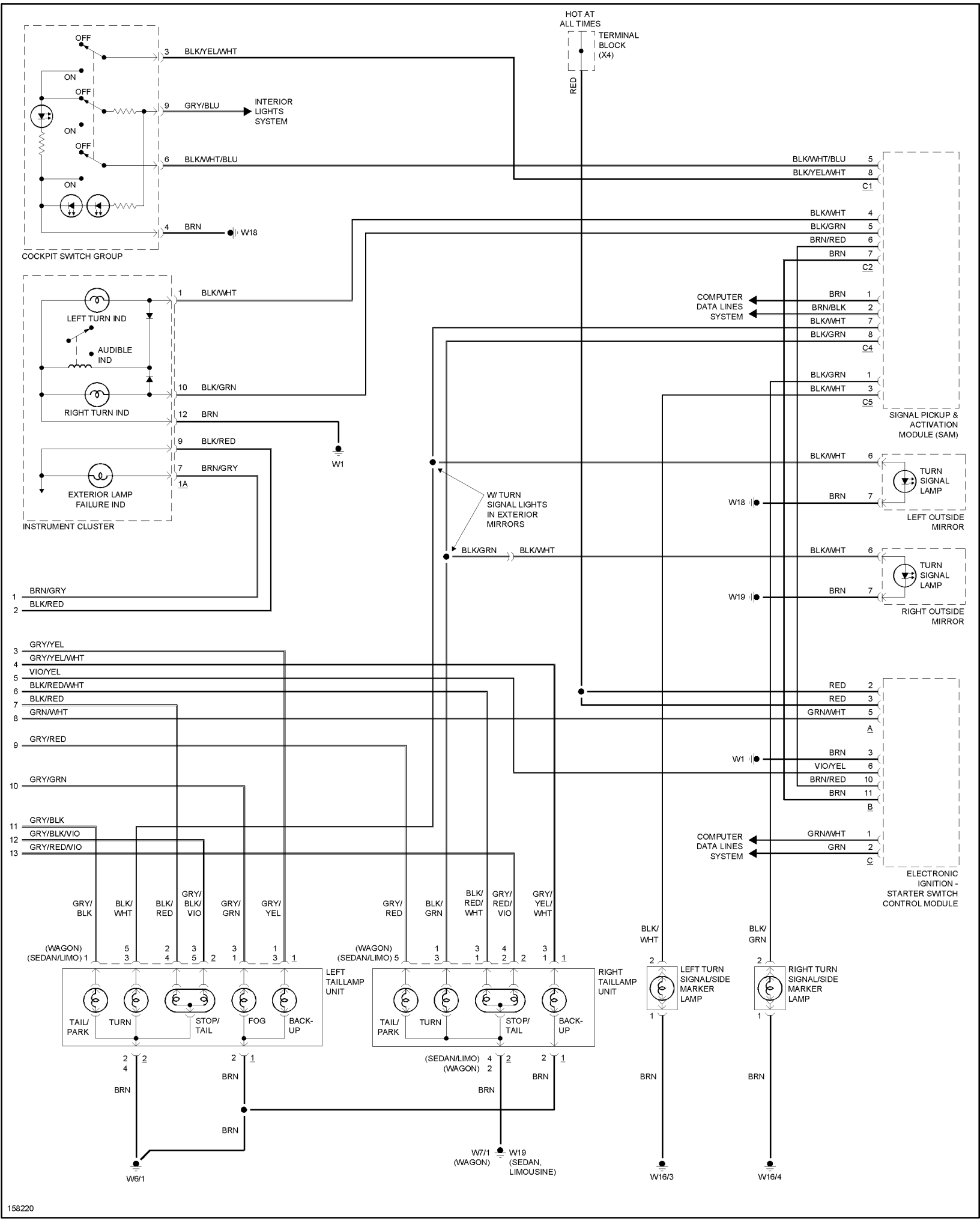
HOT AT ALL TIMES
TERMINAL BLOCK (X4)
RED
OFF
ON
3 BLK/YEL/WHT
9 GRY/BLU
INTERIOR LIGHTS SYSTEM
6 BLK/WHT/BLU
4 BRN
W18
COCKPIT SWITCH GROUP
1 BLK/WHT
LEFT TURN IND
AUDIBLE IND
10 BLK/GRN
RIGHT TURN IND
12 BRN
W1
9 BLK/RED
7 BRN/GRY
1A
EXTERIOR LAMP FAILURE IND
INSTRUMENT CLUSTER
BRN/GRY
BLK/RED
BLK/WHT/BLU 5
BLK/YEL/WHT 8
C1
BLK/WHT 4
BLK/GRN 5
BRN/RED 6
BRN 7
C2
COMPUTER DATA LINES SYSTEM
BRN 1
BRN/BLK 2
BLK/WHT 7
BLK/GRN 8
C4
BLK/GRN 1
BLK/WHT 3
C5
SIGNAL PICKUP & ACTIVATION MODULE (SAM)
BLK/WHT 6
BRN 7
W18
TURN SIGNAL LAMP
LEFT OUTSIDE MIRROR
W/ TURN SIGNAL LIGHTS IN EXTERIOR MIRRORS
BLK/GRN
BLK/WHT
BLK/WHT 6
BRN 7
W19
TURN SIGNAL LAMP
RIGHT OUTSIDE MIRROR
GRY/YEL
GRY/YEL/WHT
VIO/YEL
BLK/RED/WHT
BLK/RED
GRN/WHT
GRY/RED
GRY/GRN
GRY/BLK
GRY/BLK/VIO
GRY/RED/VIO
RED 2
RED 3
GRN/WHT 5
A
BRN 3
VIO/YEL 6
BRN/RED 10
BRN 11
B
W1
COMPUTER DATA LINES SYSTEM
GRN/WHT 1
GRN 2
C
ELECTRONIC IGNITION - STARTER SWITCH CONTROL MODULE
GRY/BLK
BLK/WHT
BLK/RED
GRY/BLK/VIO
GRY/GRN
GRY/YEL
(WAGON)
(SEDAN/LIMO) 1
LEFT TAILLAMP UNIT
TAIL/PARK
TURN
STOP/TAIL
FOG
BACK-UP
GRY/RED
BLK/GRN
BLK/RED/WHT
GRY/RED/VIO
GRY/YEL/WHT
(WAGON)
(SEDAN/LIMO) 5
RIGHT TAILLAMP UNIT
TAIL/PARK
TURN
STOP/TAIL
BACK-UP
BLK/WHT
LEFT TURN SIGNAL/SIDE MARKER LAMP
BLK/GRN
RIGHT TURN SIGNAL/SIDE MARKER LAMP
BRN
(SEDAN/LIMO) 4
(WAGON) 2
W6/1
W7/1 (WAGON)
W19 (SEDAN, LIMOUSINE)
W16/3
W16/4
158220